271NM306-00

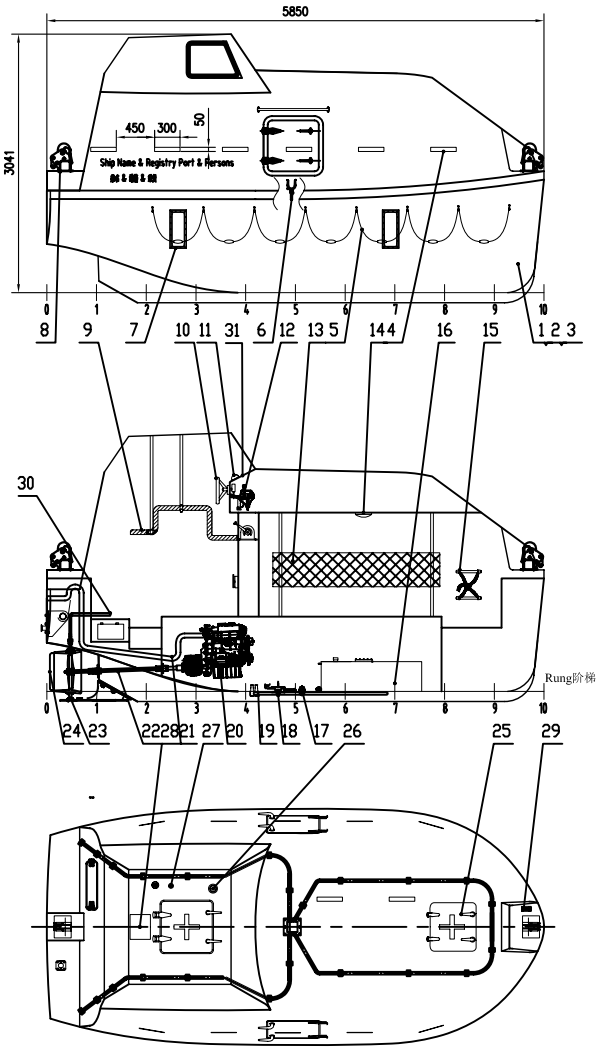


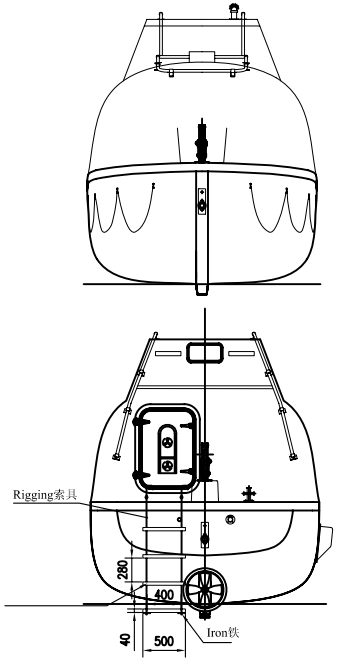


NOTE1:Meet the international safety of life at sea, SOLAS convention 96 amendment MSC. 47 (66), MSC. 216 (82), MSC. 317 (89), the international life-saving appliances rules (LSA) MSC. 48(66), MSC. 218 (82), MSC. 272 (85), MSC. 320 (89) amendment, applicable requirements for the life-saving appliances test MSC. 81 (70), MSC. 226 (82), MSC. 274 (85), MSC. 321 (89), MSC. 323 (89) amendment.

NOTE2:The 380J-3 engine is as main engine of the lifeboat,it is able to satisfy the 4.4.6.1 of LSA Code,having whole series of certifications.

注意1：满足国际海上人命安全SOLAS公约96修正案MSC.47(66)、MSC.216(82)、MSC.317(89)，国际救生设备规则(LSA) MSC.48(66)、MSC.218(82)、MSC.272(85)、MSC.320(89)修正案，救生设备试验MSC.81(70)、MSC.226(82)、MSC.274(85) 、MSC.321(89)、MSC.323(89) 修正案的有关要求。

注意2：主机380J-3，BUKH DV29RME YANMAR符合4.4.6.1，有相应的证书。

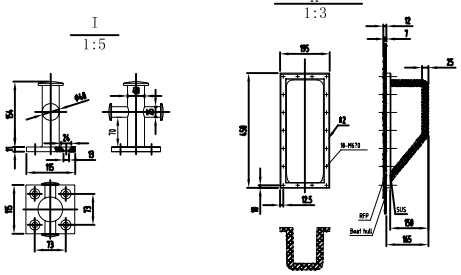


| 序号 | 代号 | 名称 | 数量 | 材料 | 单件 重量 | 总计 重量 | 备注 |
|---|---|---|---|---|---|---|---|
| 27 | 271NM306-18 | 雨水收集器 Rain collector | 1 | ASSEM | | | |
| 26 | TJ-4701 | 雷达反射器 Radar reflector | 1 | ASSEM | | | |
| 25 | 271NM306-17-0 | 门窗及罩 Door, windows & Cover | 1 | ASSEM | | | |
| 24 | 271NM306-16 | 导流管件护罩 Cover | 1 | SUS304 | | | |
| 23 | 271NM306-15 | 导流管舵 Rudder | 1 | ASSEM | | | |
| 22 | 271NM306-14-0 | 动力系统 Powersystem | 1 | ASSEM | | | |
| 21 | 271NM306-13-0 | 排气系统 Exhaust system | 1 | ASSEM | | | |
| 20 | | 发动机 Engine | 1 | ASSEM | | | |
| 19 | | 冷却系统 Cooling system | 1 | ASSEM | | | |
| 18 | 271NM306-12-0 | 自动释放器 hydrostatic release | 1 | ASSEM | | | |
| 17 | 271NM306-11 | 排水系统 Drain system | 1 | ASSEM | | | |
| 16 | 271NM306-09-0 | 加油系统 Fuel system | 1 | ASSEM | | | |
| 15 | | 安全带 Safety belt | 45 | ASSEM | | | |
| 14 | CCD12 | 舱内灯 Cabin light | 2 | ASSEM | | | |
| 13 | 271NM306-08 | 靠背 Backrest | 1 | ASSEM | | | |
| 12 | WS97-B0H12V/80 | 探照灯 Search light | 1 | ASSEM | | | |
| 11 | XQ-50 | 磁罗盘 Compass | 1 | ASSEM | | | |
| 10 | | 方向盘 Steering wheel | 1 | ASSEM | | | |
| 9 | | 旋转坐椅 Pivot Seat | 1 | F.R.P | | | |
| 8 | 271NM306-06-0 | 脱钩装置 Release Mechanism | 2 | ASSEM | | | |
| 7 | 271NM306-05 | 滑板 Skate | 2 | ASSEM | | | |
| 6 | 271NM306-04 | 拐杖 Crutchs | 2 | SUS304 | | | |
| 5 | | 救生绳带 Life Lines | 2 | ASSEM | | | |
| 4 | H-31501 | 反光带 Reflector Belt | 24 | | | | |
| 3 | 271NM306-03 | 舱室布置图 Ownpancy Arrangement | | | | | |
| 2 | 271NM306-02 | 结构图 Structure Figure | | | | | |
| 1 | 271NM306-01 | 线型图 Lines Plan | | | | | |

MANIN MPARTICLAS 主要参数

| | |
|---|---|
| Length 艇长 | 5.85m |
| Breadth（mld） 艇宽 | 2.78m |
| Depth 艇深 | 1.20m |
| Height O.A 总高 | 3.05m |
| Hook Distance 钩距 | 5.45m |
| Design draft 设计吃水 | 0.67m |
| Light Weight 空载 | 2780Kg |
| Speed 航速 | ≥6 Knots |

As rescue boat作救助艇时乘员 6P（人）].

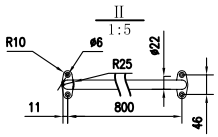


| | | | | | |
|---|---|---|---|---|---|
| 31 | 271NM306-20-0 | 舵机系统 Steering system | 1 | ASSEM | |
| 30 | 271NM306-19-0 | 脱钩器 Painter release unit | 1 | ASSEM | |
| 29 | BSW9812 12V/13 | 示位灯 Position light | 1 | ASSEM | |
| 28 | | 遥控绳孔 Remote rope hole | 1 | ASSEM | |

| MARK | QTY | SIGNATURE | MARK | QTY | SIGNATURE |
|---|---|---|---|---|---|
| DESIGNED | | | MATERIAL | | ASSEM |
| CHECKED | | | WEIGHT(kg) | | 2780 |
| VERTIFIED | | | SCALE | | 1:40 |
| DATE | | 2016.06 | REVSION NO | | Rev01 |

宁波新海业救生设备有限公司
NINGBO NEW MARINE LIFESAVING EQUIPMENT CO., LTD

PROD. NAME: NM58C/F 全封闭救生/救助艇
NM58C/F TOTALLY ENCLOSED LIFE/RESCUE BOAT

DWG. NAME: 总布置图
GENERAL ARRANGEMENT

PROJECTION

DWG. No. 271NM306-00

DISK FILE 271NM306-01